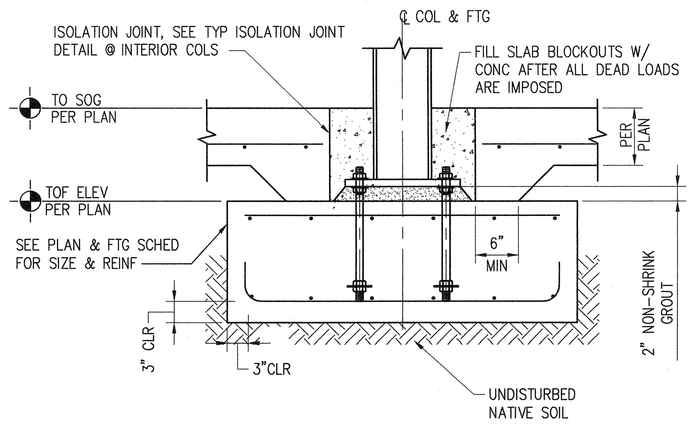

1 S402 INTERIOR COLUMN FOOTING
SCALE: 1" = 1'-0"

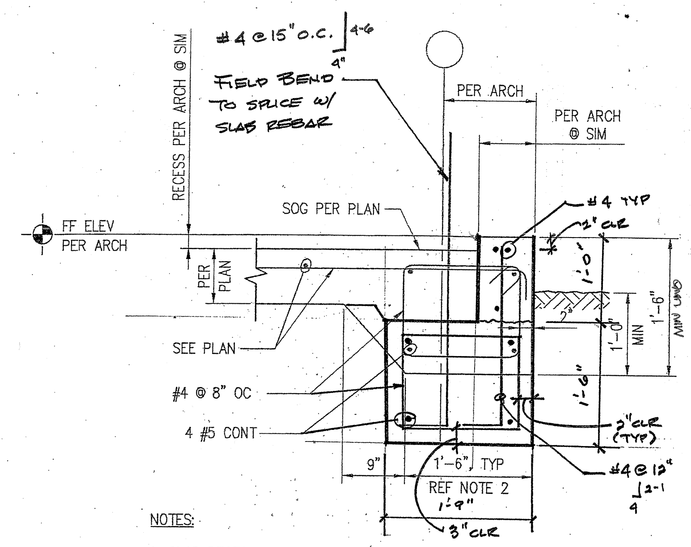

NOTES:

1. SLAB RECESS SHOWN OCCURS ONLY WHERE INDICATED PER PLAN & ARCH.
2. WIDEN AS REQ'D TO MATCH GRADE BEAM BELOW WHERE OCCURS.

2 S402 SLAB EDGE SECTION
SCALE: 1" = 1'-0"

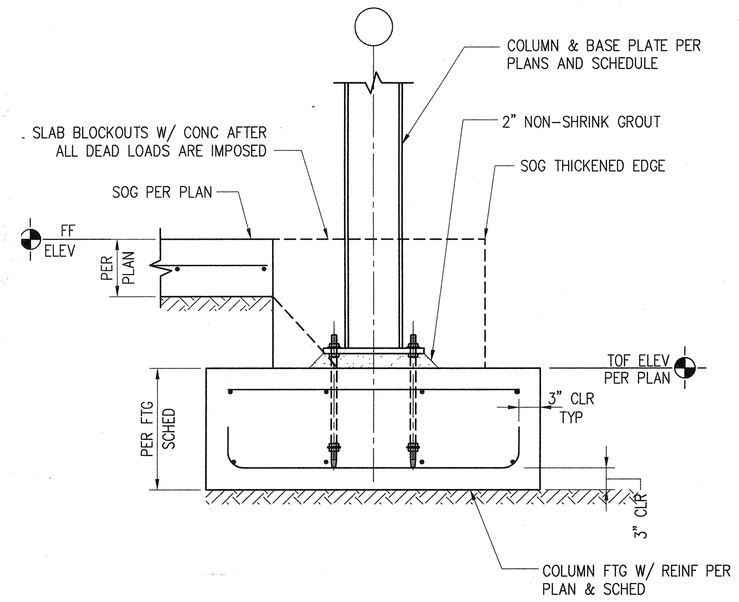

3 S402 EXTERIOR COLUMN FOOTING
SCALE: 1" = 1'-0"

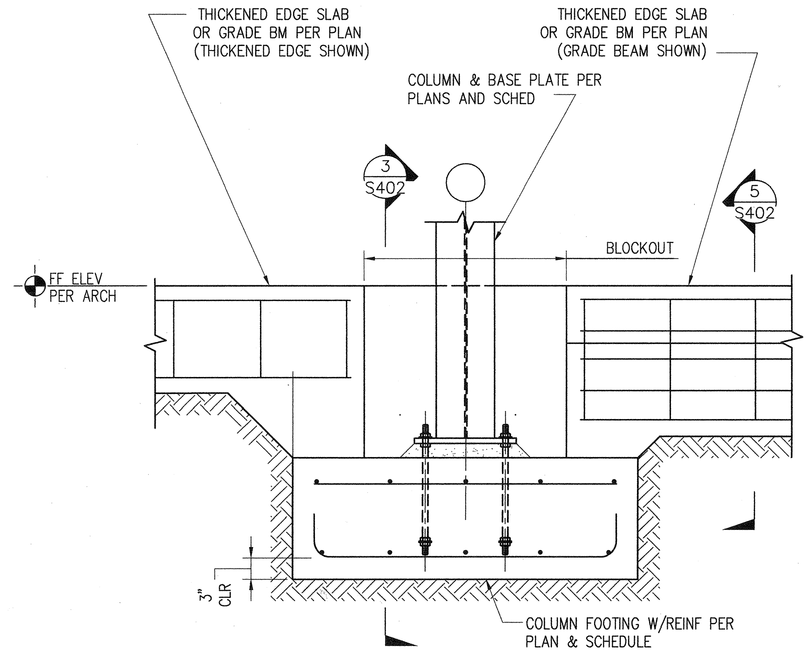

4 S402 EXT COLUMN FOOTING
SCALE: 1" = 1'-0"

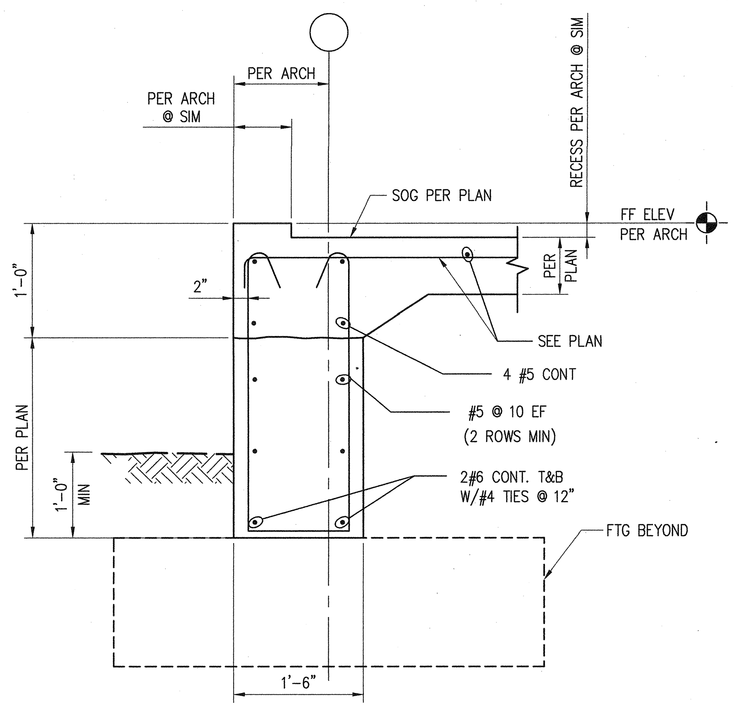

5 S402 SLAB EDGE AND GRADE BEAM
SCALE: 1" = 1'-0"

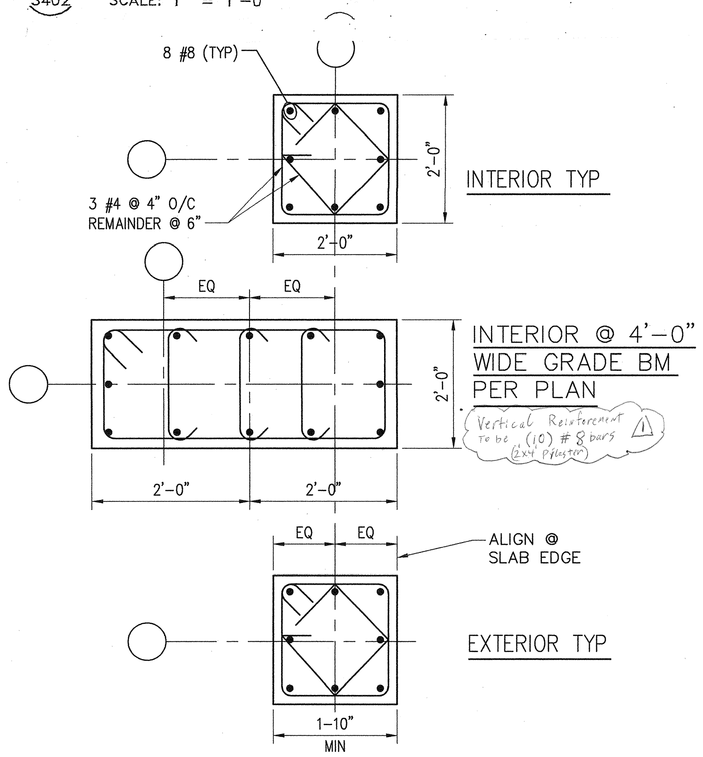

6 S402 TYPICAL PLASTER SECTION
SCALE: 1" = 1'-0"

RFI # 128, 1/9/6, TCC
Q: On S102 at the elevator pit there is a F2 spread footing, a pilaster, and a C2 column that centers on grid lines N.E, and N.4. Per detail 6/S402 the pilaster is 2' X 2'. Go to detail A15/A500 and detail H32/A500 dimensions look to be 2 1/2" from grid line N.4 to inside face of wall, and H32 has the grid line inside the shaft. RFI # 80 Noted that detail A15/A500 is the intended location of the wall along grid line N.4.
Please confirm location of elevator shaft wall to grid lines N.4 and N.E.
Also if dimensions to center line of column is correct from grid line N.4 and N.E the pilaster will be protruding into the elevator shaft pit, is this acceptable?
A: See attached sketch sheets 1 & 2. Pilaster size has been reduced to 16X20. The projected dimensions noted have been coordinated with Pete of the elevator supplier. Please note that elevator pit has been moved west by 1 inch.
Please provide reinf as shown for the 2' X 2' pilaster.

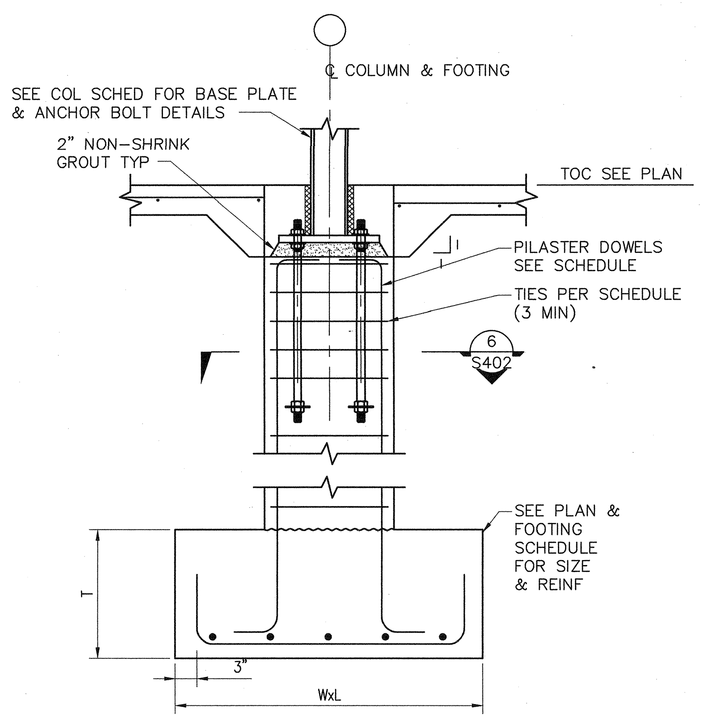

7 S402 TYPICAL FOOTING DETAIL
SCALE: 1" = 1'-0"

FOOTING MARK	PLAN SIZE	THICKNESS	REINFORCEMENT
F1	4'-0" SQ.	1'-0"	8-#4 EW-BOTTOM
F2	5'-0" SQ.	1'-2"	8-#4 EW-BOTTOM
F3	5'-0" SQ.	2'-6"	17-#4 EW-TOP 17-#4 EW-BOTTOM
F4	6'-0" SQ.	1'-4"	7-#5 EW-BOTTOM
F5	6'-0" SQ.	2'-6"	15-#6 EW-TOP 15-#6 EW-BOTTOM
F6	7'-0" SQ.	1'-6"	9-#5 EW-BOTTOM
F7	7'-0" SQ.	2'-6"	11-#6 EW-TOP 11-#6 EW-BOTTOM
F8	7'-0" SQ.	3'-6"	15-#6 EW-TOP 15-#6 EW-BOTTOM
F9	8'-0" SQ.	1'-6"	8-#6 EW-BOTTOM
F10	8'-0" SQ.	2'-6"	12-#6 EW-TOP 12-#6 EW-BOTTOM
F11	8'-0" SQ.	3'-0"	15-#6 EW-TOP 15-#6 EW-BOTTOM
F12	8'-0" SQ.	4'-0"	19-#6 EW-TOP 19-#6 EW-BOTTOM
F13	9'-0" SQ.	2'-6"	14-#6 EW-TOP 14-#6 EW-BOTTOM
F14	9'-0" SQ.	3'-6"	19-#6 EW-TOP 19-#6 EW-BOTTOM
F15	9'-0" SQ.	4'-0"	22-#7 EW-TOP 22-#7 EW-BOTTOM
F16	10'-0" SQ.	4'-0"	18-#7 EW-TOP 18-#7 EW-BOTTOM
F17	10'-0" SQ.	5'-0"	22-#7 EW-TOP 22-#7 EW-BOTTOM
F18	15'-6"x8'-0"	2'-6"	22-#6 SHORT-TOP & BOT 14-#6 EW-LONG TOP & BOT
F19	11'-0" SQ.	5'-0"	22-#7 EW-TOP 22-#7 EW-BOTTOM

12 S402 SPREAD FOOTING SCHED.
SCALE: NTS

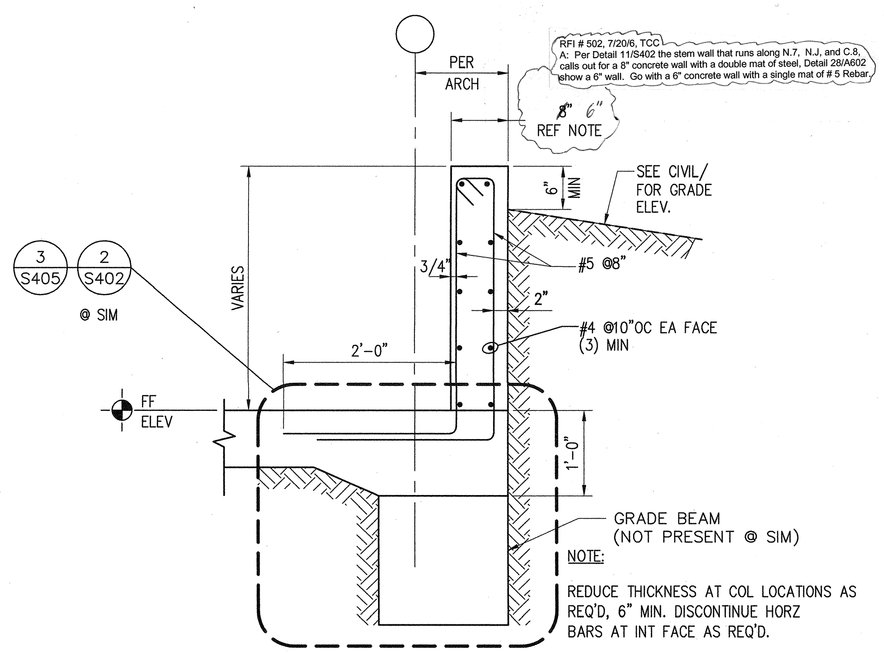

11 S402 SLAB EDGE SECTION
SCALE: 1" = 1'-0"

BARKER RINKER SEACAT
2300 Fifteenth Street, Suite 100
Denver, Colorado 80202
303-455-1366 Fax. 303-455-7457
http://www.brsarch.com
arai jackson ellison murakami LLP
ARCHITECTURE | URBAN DESIGN | INTERIORS

BERGER/ABAM ENGINEERS INC.
720 OLIVE WAY, SUITE 1100
SEATTLE, WA 98101
VOICE: 206-357-5600
FAX: 206-357-5601

CITY OF Federal Way

Federal Way Community Center

33190 9th Avenue South

STATE OF WASHINGTON ABDUL J. CHALLAH 27120 REGISTERED PROFESSIONAL ENGINEER
4/28/05
EXPIRES APRIL 7, 2006

Drawn By: DJP
Checked By: VII
Date: 4/25/2005

Revision / Date:	
PERMIT ISSUE	2/7/05
Q.A. ISSUE	3/18/05
BID ISSUE	4/25/05

AS-BUILTS

Sheet Title:
FOUNDATION DETAILS AND SCHEDULE

S402

Last Saved on Wed Apr 20 2005 at 11:45AM by Pack File Name: F:\2004\SABLD-04-003\CADD\dwgs\S402.dwg Scale: 1